Database System Architectures

Database System Concepts, 7th Ed.

©Silberschatz, Korth and Sudarshan
See www.db-book.com for conditions on re-use

Outline

- Centralized Database Systems
- Server System Architectures
- Parallel Systems
- Distributed Systems
- Network Types

Centralized Database Systems

- Run on a single computer system
- **Single-user system**
  - Embedded databases
- **Multi-user systems** also known as **server systems**.
  - Service requests received from client systems
  - Multi-core systems with **coarse-grained parallelism**
    - Typically a few to tens of processor cores
    - In contrast, fine-grained parallelism uses very large number of computers

Server System Architecture

- Server systems can be broadly categorized into two kinds:
  - **transaction servers**
    - Widely used in relational database systems, and
  - **data servers**
    - Parallel data servers used to implement high-performance transaction processing systems

Transaction Servers

- Also called **query server** systems or SQL *server* systems
  - Clients send requests to the server
  - Transactions are executed at the server
  - Results are shipped back to the client.
- Requests are specified in SQL, and communicated to the server through a *remote procedure call* (RPC) mechanism.
- Transactional RPC allows many RPC calls to form a transaction.
- Applications typically use ODBC/JDBC APIs to communicate with transaction servers

Transaction System Processes (Cont.)

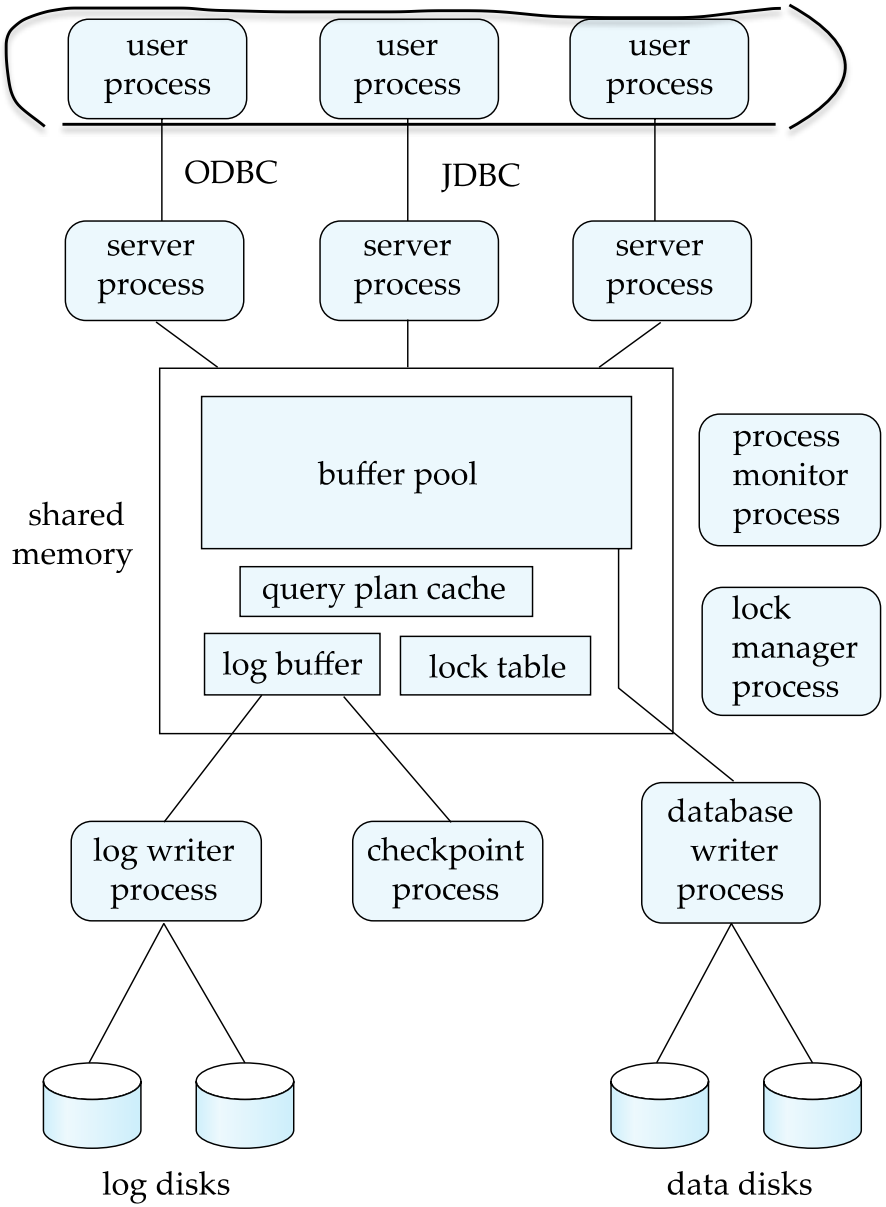

Transaction Server Process Structure

- A typical transaction server consists of multiple processes accessing data in shared memory
- Shared memory contains shared data
  - Buffer pool
  - Lock table
  - Log buffer
  - Cached query plans (reused if same query submitted again)
- All database processes can access shared memory
- Server processes
  - These receive user queries (transactions), execute them and send results back
  - Processes may be **multithreaded**, allowing a single process to execute several user queries concurrently
  - Typically multiple multithreaded server processes

Transaction Server Processes (Cont.)

- Database writer process
  - Output modified buffer blocks to disks continually
- Log writer process
  - Server processes simply add log records to log record buffer
  - Log writer process outputs log records to stable storage.
- Checkpoint process
  - Performs periodic checkpoints
- Process monitor process
  - Monitors other processes, and takes recovery actions if any of the other processes fail
    - E.g. aborting any transactions being executed by a server process and restarting it

Transaction System Processes (Cont.)

- Lock manager process
  - To avoid overhead of interprocess communication for lock request/grant, each database process operates directly on the lock table
    - instead of sending requests to lock manager process
  - Lock manager process still used for deadlock detection
- To ensure that no two processes are accessing the same data structure at the same time, databases systems implement **mutual exclusion** using either
  - Atomic instructions
    - Test-And-Set
    - Compare-And-Swap (CAS)
  - Operating system semaphores
    - Higher overhead than atomic instructions

Atomic Instructions

- **Test-And-Set**(M)
  - Memory location M, initially 0
  - Test-and-set(M) sets M to 1, and returns old value of M
    - Return value 0 indicates process has acquired the mutex
    - Return value 1 indicates someone is already holding the mutex
      - Must try again later
    - Release of mutex done by setting M = 0
- **Compare-and-swap**(M, V1, V2)
  - Atomically do following
    - If M = V1, set M = V2 and return success
    - Else return failure
  - With M = 0 initially, CAS(M, 0, 1) equivalent to test-and-set(M)
  - Can use CAS(M, 0, id) where id = thread-id or process-id to record who has the mutex

Data Servers/Data Storage Systems

- Data items are shipped to clients where processing is performed
- Updated data items written back to server
- Earlier generation of data servers would operated in units of data items, or pages containing multiple data items
- Current generation data servers (also called data storage systems) only work in units of data items
  - Commonly used data item formats include JSON, XML, or just uninterpreted binary strings

Data Servers/Storage Systems (Cont.)

- **Prefetching**
  - Prefetch items that may be used soon
- **Data caching**
  - Cache coherence
- **Lock caching**
  - Locks can be cached by client across transactions
  - Locks can be **called back** by the server
- **Adaptive lock granularity**
  - **Lock granularity escalation**
    - switch from finer granularity (e.g. tuple) lock to coarser
  - **Lock granularity de-escalation**
    - Start with coarse granularity to reduce overheads, switch to finer granularity in case of more concurrency conflict at server
    - Details in book

Data Servers (Cont.)

- **Data Caching**
  - Data can be cached at client even in between transactions
  - But check that data is up-to-date before it is used (**cache coherency**)
  - Check can be done when requesting lock on data item
- **Lock Caching**
  - Locks can be retained by client system even in between transactions
  - Transactions can acquire cached locks locally, without contacting server
  - Server **calls back** locks from clients when it receives conflicting lock request. Client returns lock once no local transaction is using it.
    - Similar to lock callback on prefetch, but across transactions.

Parallel Systems

- Parallel database systems consist of multiple processors and multiple disks connected by a fast interconnection network.
- Motivation: handle workloads beyond what a single computer system can handle
- High performance **transaction processing**
  - E.g. handling user requests at web-scale
- **Decision support** on very large amounts of data
  - E.g. data gathered by large web sites/apps

Parallel Systems (Cont.)

- A **coarse-grain parallel** machine consists of a small number of powerful processors
- A **massively parallel** or **fine grain parallel** machine utilizes thousands of smaller processors.
  - Typically hosted in a **data center**
- Two main performance measures:
  - **throughput** --- the number of tasks that can be completed in a given time interval
  - **response time** --- the amount of time it takes to complete a single task from the time it is submitted

Speed-Up and Scale-Up

- **Speedup**: a fixed-sized problem executing on a small system is given to a system which is *N*-times larger.
  - Measured by:

$$speedup = \frac{small\ system\ elapsed\ time}{large\ system\ elapsed\ time}$$

  - Speedup is **linear** if equation equals N.
- **Scaleup**: increase the size of both the problem and the system
  - *N*-times larger system used to perform *N*-times larger job
  - Measured by:

$$scaleup = \frac{small\ system\ small\ problem\ elapsed\ time}{big\ system\ big\ problem\ elapsed\ time}$$

  - Scale up is **linear** if equation equals 1.

Speedup

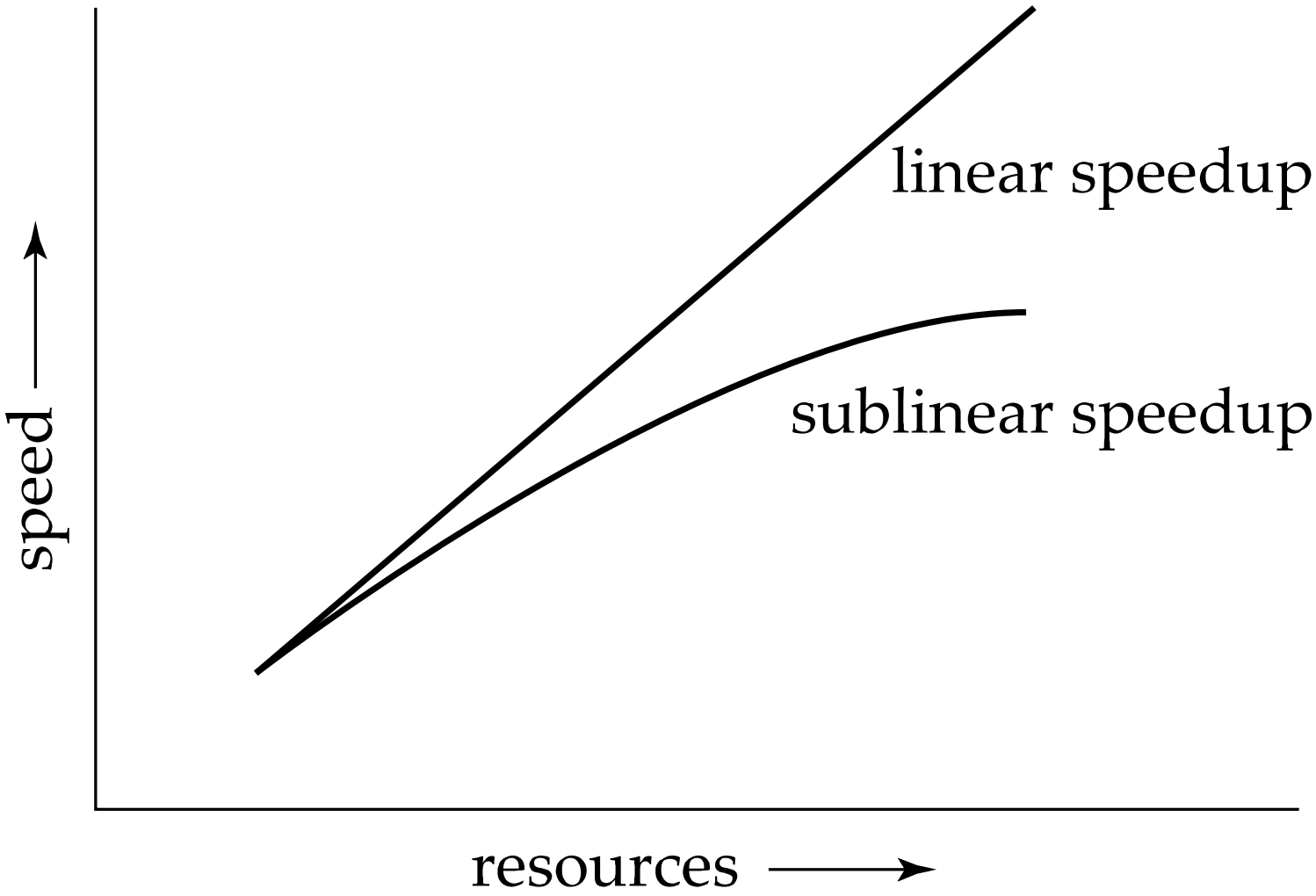

Scaleup

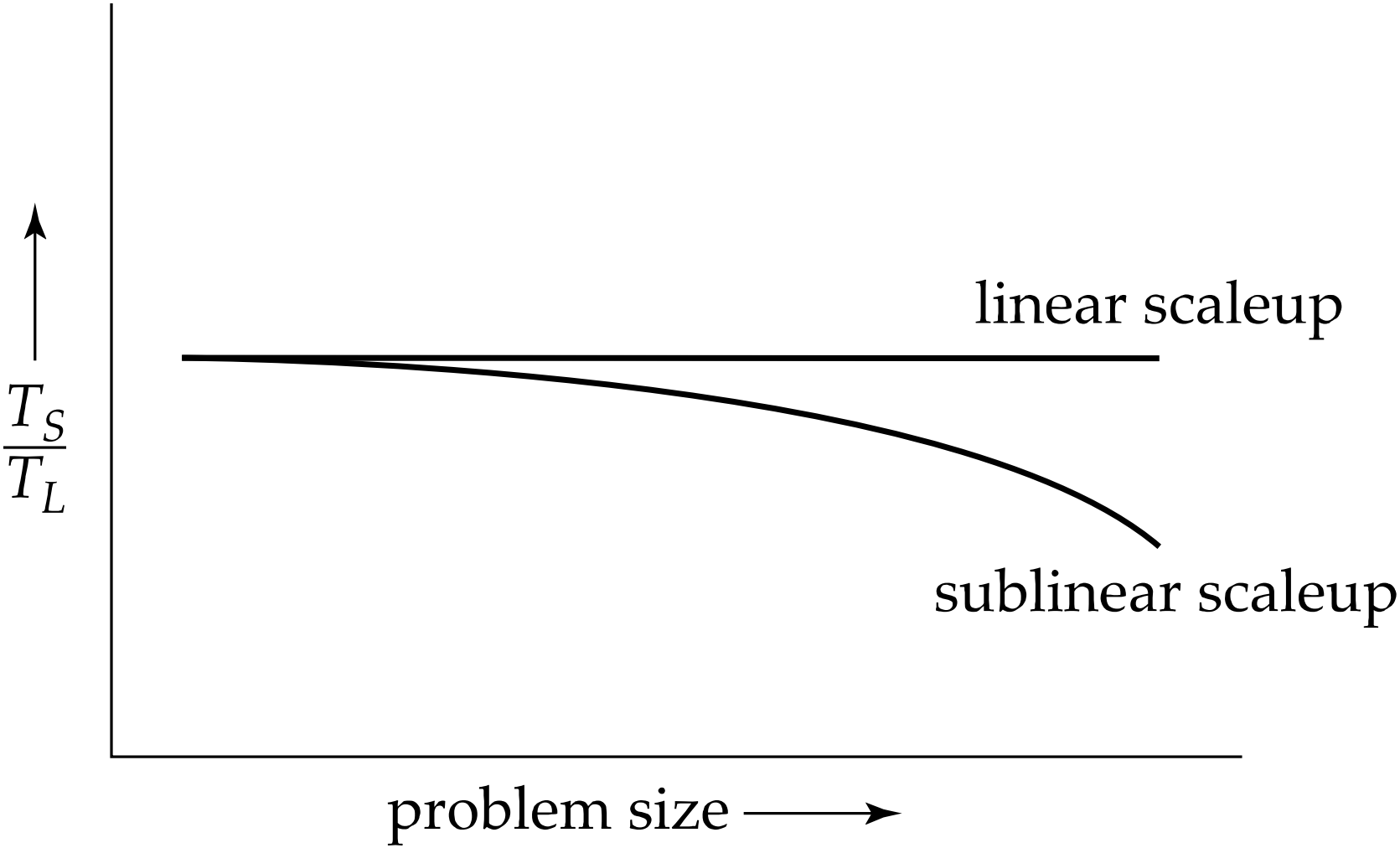

Batch and Transaction Scaleup

- **Batch scaleup**:
  - A single large job; typical of most decision support queries and scientific simulation.
  - Use an *N*-times larger computer on *N*-times larger problem.
- **Transaction scaleup**:
  - Numerous small queries submitted by independent users to a shared database; typical transaction processing and timesharing systems.
  - *N*-times as many users submitting requests (hence, *N*-times as many requests) to an *N*-times larger database, on an *N*-times larger computer.
  - Well-suited to parallel execution.

Factors Limiting Speedup and Scaleup

للفهم ولكن ليس معنا

Speedup and scaleup are often sublinear due to:

- **Startup/sequential costs**: Cost of starting up multiple processes, and sequential computation before/after parallel computation
  - May dominate computation time, if the degree of parallelism is high
  - Suppose *p* fraction of computation is sequential
  - **Amdahl's law**: speedup limited to: $1 / [(1-p)+(p/n)]$
  - **Gustafson's law**: scaleup limited to: $1 / [n(1-p)+p]$
- **Interference**: Processes accessing shared resources (e.g.,system bus, disks, or locks) compete with each other, thus spending time waiting on other processes, rather than performing useful work.
- **Skew**: Increasing the degree of parallelism increases the variance in service times of parallely executing tasks. Overall execution time determined by **slowest** of parallely executing tasks.

Interconnection Network Architectures

- **Bus**. System components send data on and receive data from a single communication bus;
  - Does not scale well with increasing parallelism.
- **Mesh**. Components are arranged as nodes in a grid, and each component is connected to all adjacent components
  - Communication links grow with growing number of components, and so scales better.
  - But may require $2\sqrt{n}$ hops to send message to a node (or $\sqrt{n}$ with wraparound connections at edge of grid).
- **Hypercube**. Components are numbered in binary; components are connected to one another if their binary representations differ in exactly one bit.
  - *n* components are connected to *log(n)* other components and can reach each other via at most *log(n)* links; reduces communication delays.
- **Tree-like Topology**. Widely used in data centers today

Interconnection Architectures

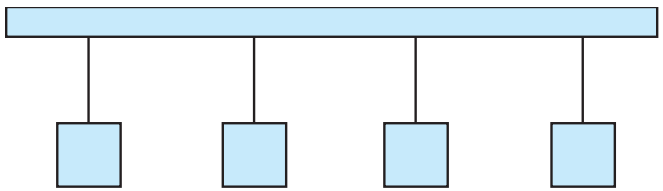

(a) bus

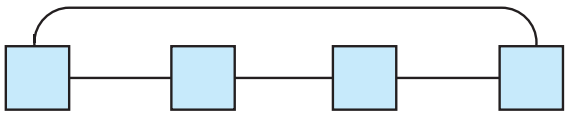

(b) ring

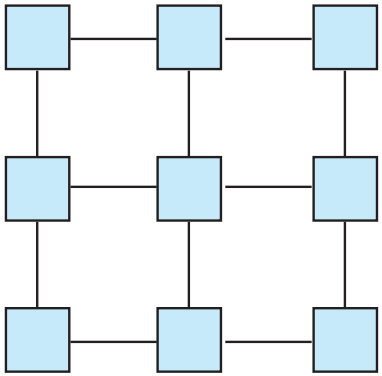

(c) mesh

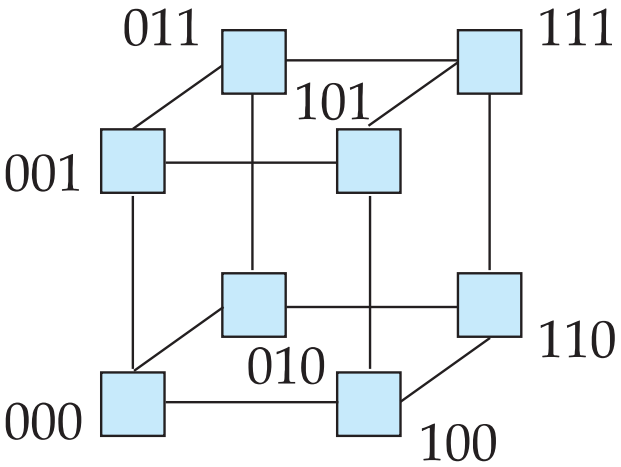

(d) hypercube

Interconnection Network Architectures

- **Tree-like or Fat-Tree Topology**: widely used in data centers today
  - Top of rack switch for approx 40 machines in rack
  - Each top of rack switch connected to multiple aggregation switches.
  - Aggregation switches connect to multiple core switches.
- **Data center fabric**

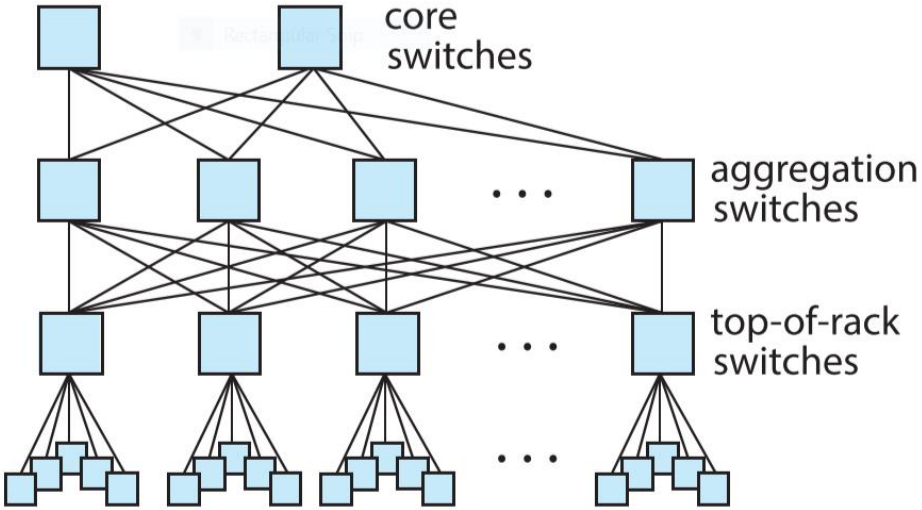

(e) tree-like topology

Network Technologies

- Ethernet
  - 1 Gbps and 10 Gbps common, 40 Gbps and 100 Gbps are available at higher cost
- Fiber Channel
  - 32-138 Gbps available
- **Infiniband**
  - a very-low-latency networking technology
    - 0.5 to 0.7 microseconds, compared to a few microseconds for optimized ethernet

Parallel Database Architectures

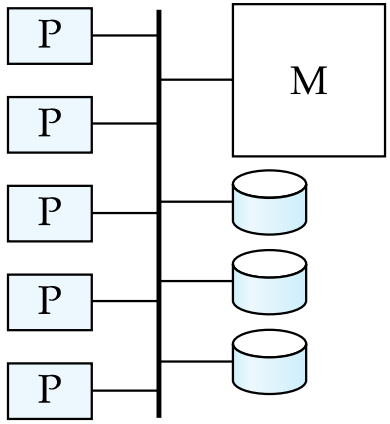

(a) shared memory

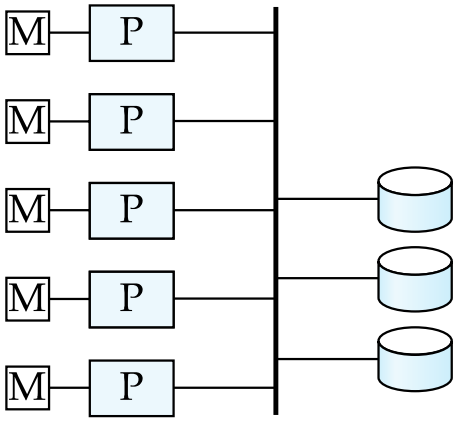

(b) shared disk

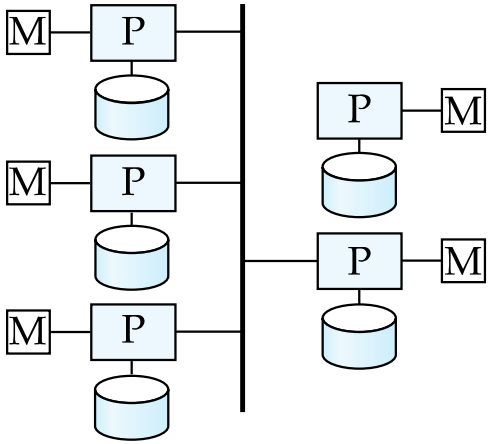

(c) shared nothing

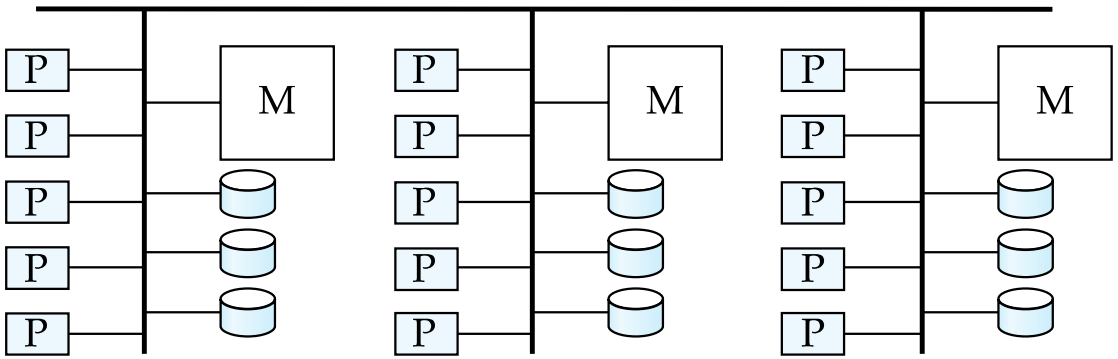

(d) hierarchical

Shared Memory

- Processors (or processor cores) and disks have access to a common memory
  - Via a bus in earlier days, through an interconnection network today
- Extremely efficient communication between processors
- Downside: shared-memory architecture is not scalable beyond 64 to 128 processor cores
  - Memory interconnection network becomes a bottleneck

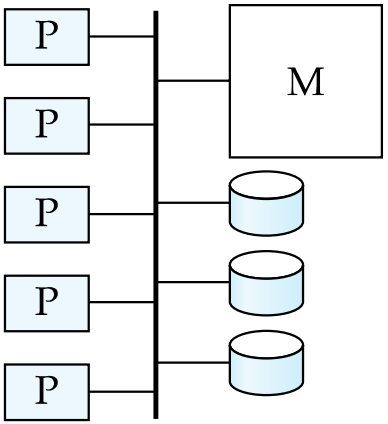

(a) shared memory

Modern Shared Memory Architecture

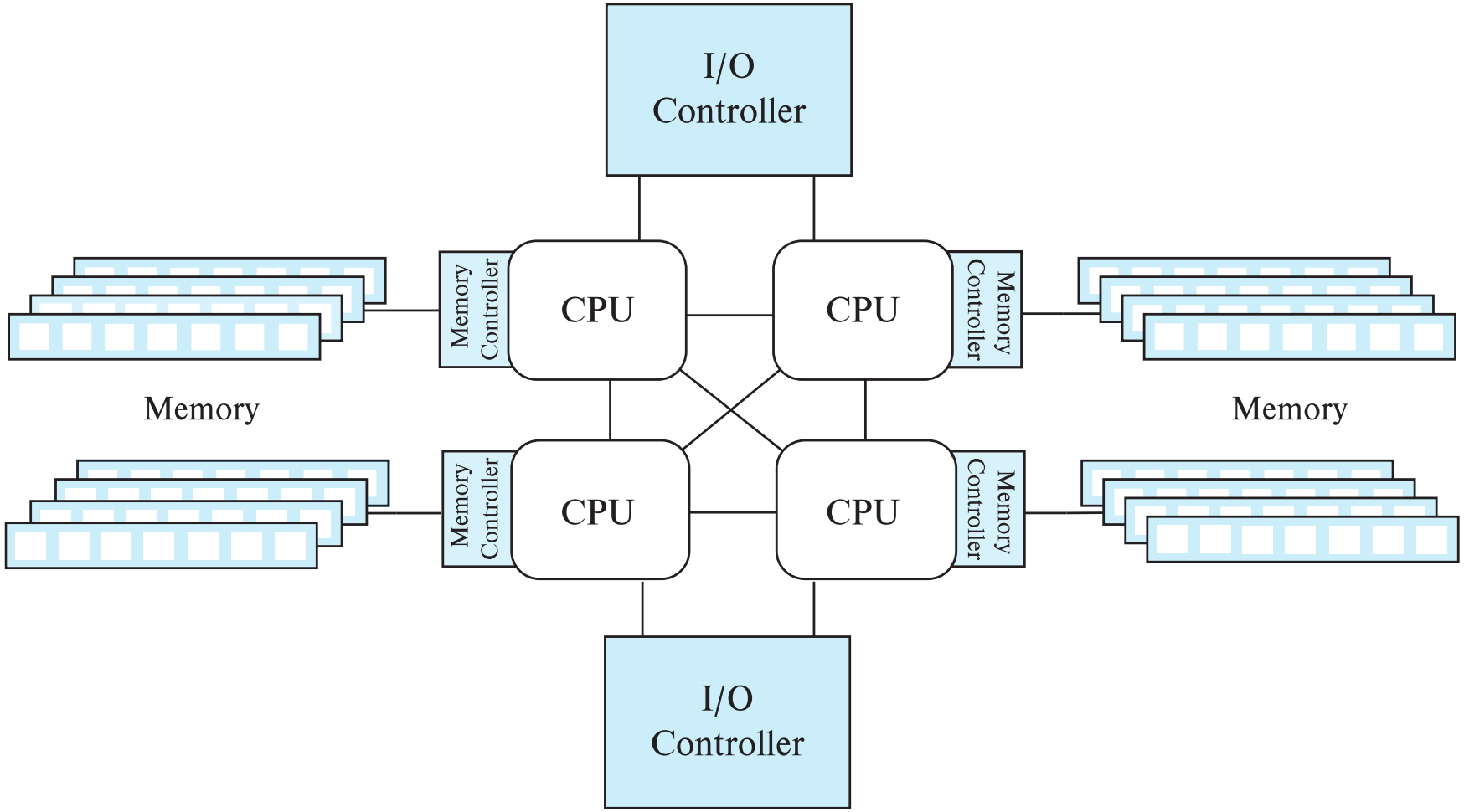

Cache Levels

- Cache line: typically 64 bytes in today's processors
- Cache levels within a single multi-core processor

Core 0	Core 1	Core 2	Core 3
L1 Cache	L1 Cache	L1 Cache	L1 Cache
L2 Cache	L2 Cache	L2 Cache	L2 Cache
Shared L3 Cache			

- Shared memory system can have multiple processors, each with its own cache levels

Cache Coherency

- Cache coherency:
  - Local cache may have out of date value
  - Strong vs weak consistency models
  - With weak consistency, need special instructions to ensure cache is up to date
- Memory barrier instructions
  - **Store barrier (sfence)**
    - Instruction returns after forcing cached data to be written to memory and invalidations sent to all caches
  - **Load barrier (lfence)**
    - Returns after ensuring all pending cache invalidations are processed
  - mfence instruction does both of above
- Locking code usually takes care of barrier instructions
  - Lfence done after lock acquisition and sfence done before lock release

Shared Disk

- All processors can directly access all disks via an interconnection network, but the processors have private memories.
  - Architecture provides a degree of **fault-tolerance** — if a processor fails, the other processors can take over its tasks
    - the data of the failed processor is resident on disks that are accessible from all processors.
- Downside: bottleneck now occurs at interconnection to the disk subsystem.

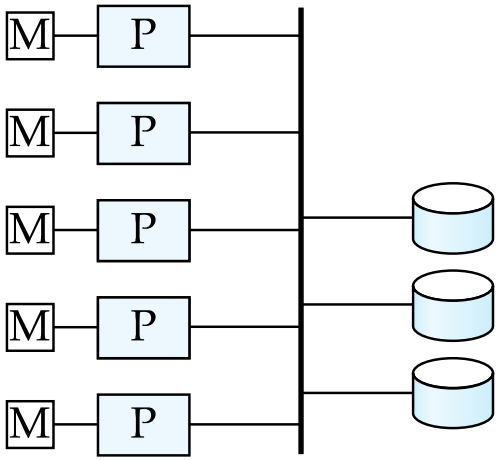

(b) shared disk

Modern Shared Disk Architectures: via Storage Area Network (SAN)

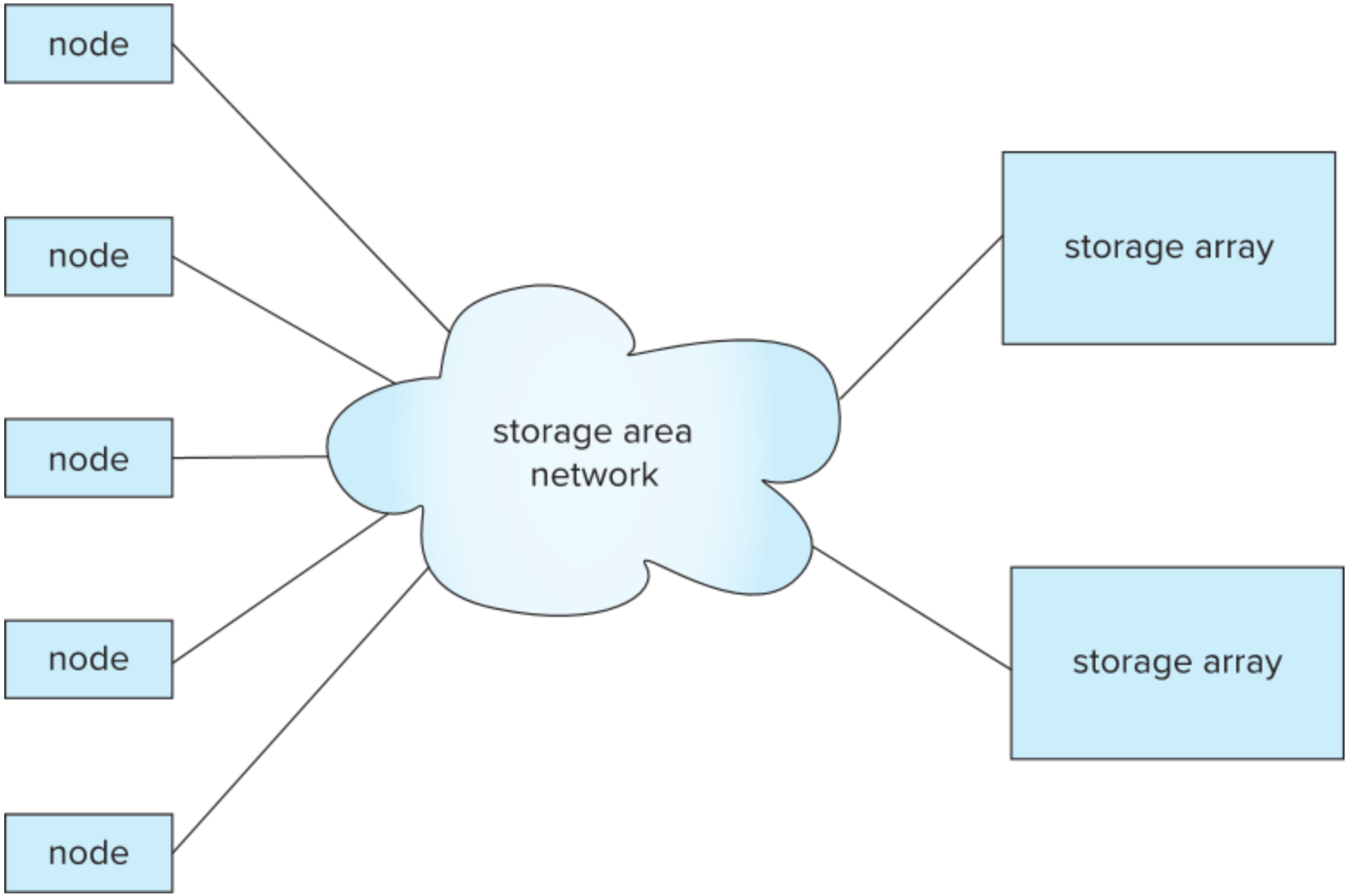

Shared Nothing

- Node consists of a processor, memory, and one or more disks
- All communication via interconnection network
- Can be scaled up to thousands of processors without interference.
- Main drawback: cost of communication and non-local disk access; sending data involves software interaction at both ends.

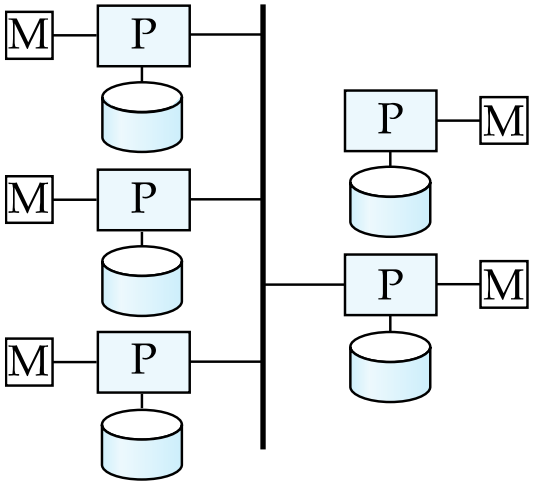

(c) shared nothing

Hierarchical

- Combines characteristics of shared-memory, shared-disk, and shared-nothing architectures.
  - Top level is a shared-nothing architecture
    - With each node of the system being a shared-memory system
  - Alternatively, top level could be a shared-disk system
    - With each node of the system being a shared-memory system

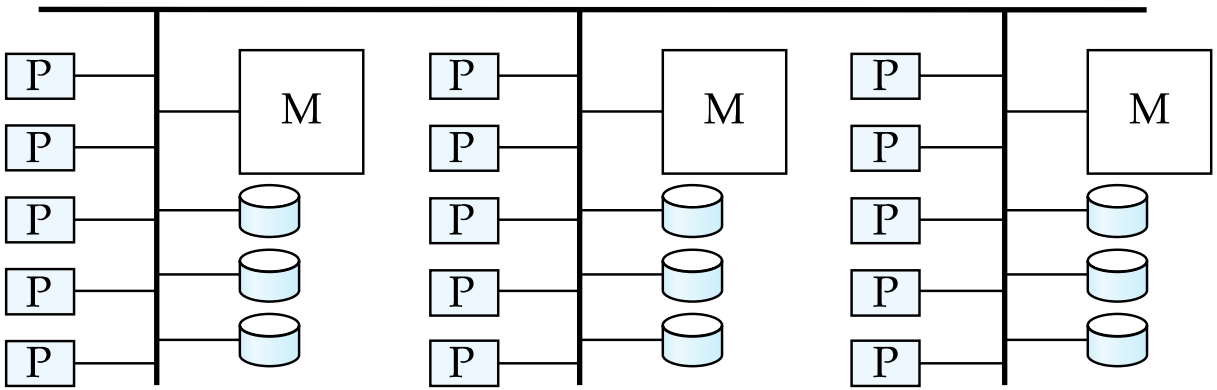

(d) hierarchical

Shared-Memory Vs Shared-Nothing

- Shared-memory internally looks like shared-nothing!
  - Each processor has direct access to its own memory, and indirect (hardware level) access to rest of memory
  - Also called **non-uniform memory architecture (NUMA)**
- Shared-nothing can be made to look like shared memory
  - Reduce the complexity of programming such systems by **distributed virtual-memory** abstraction
  - **Remote Direct Memory Access (RDMA)** provides very low-latency shared memory abstraction on shared-nothing systems
    - Often implemented on top of i**nfiniband** due it its very-low-latency
  - But careless programming can lead to performance issues

Distributed Systems

- Data spread over multiple machines (also referred to as **sites** or **nodes**).
- **Local-area networks** (**LANs**)
- **Wide-area networks** (**WAN**s)
  - Higher latency

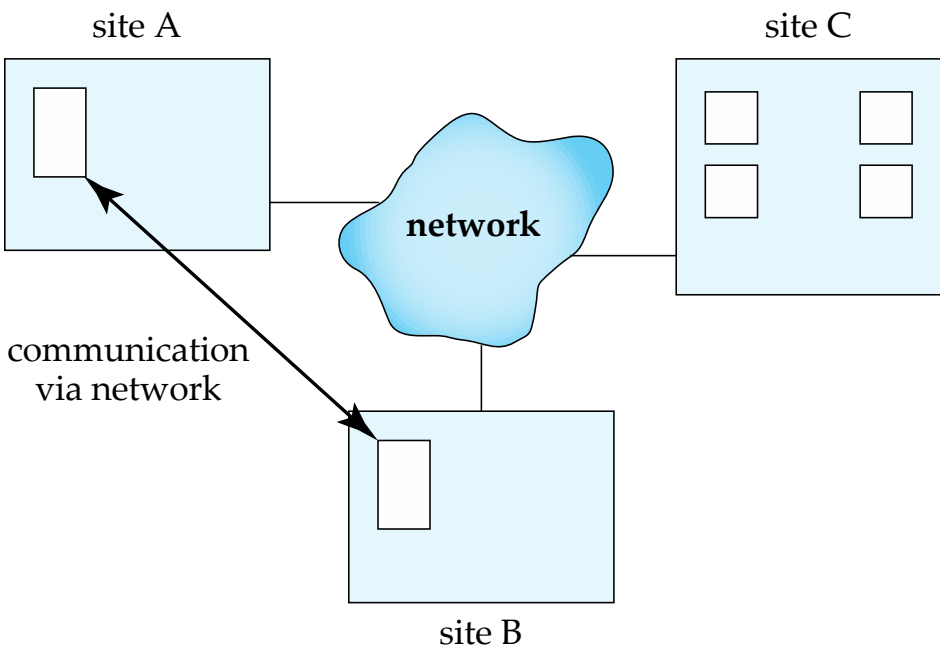

Distributed Databases

- **Homogeneous distributed databases**
  - Same software/schema on all sites, data may be partitioned among sites
  - Goal: provide a view of a single database, hiding details of distribution
- **Heterogeneous distributed databases**
  - Different software/schema on different sites
  - Goal: integrate existing databases to provide useful functionality
- Differentiate between **local transactions** and **global transactions**
  - A local transaction accesses data in the *single* site at which the transaction was initiated.
  - A global transaction either accesses data in a site different from the one at which the transaction was initiated or accesses data in several different sites.

Data Integration and Distributed Databases

- Data integration between multiple distributed databases
- Benefits:
  - Sharing data – users at one site able to access the data residing at some other sites.
  - Autonomy – each site is able to retain a degree of control over data stored locally.

Availability

- **Network partitioning**
- **Availability** of system
  - If all nodes are required for system to function, failure of even one node stops system functioning.
  - Higher system availability through redundancy
    - data can be replicated at remote sites, and system can function even if a site fails.

Implementation Issues for Distributed Databases

- Atomicity needed even for transactions that update data at multiple sites
- The **two-phase commit protocol (2PC)** is used to ensure atomicity
  - Basic idea: each site executes transaction until just before commit, and the leaves final decision to a coordinator
  - Each site must follow decision of coordinator, even if there is a failure while waiting for coordinators decision
- 2PC is not always appropriate: other transaction models based on persistent messaging, and workflows, are also used
- Distributed concurrency control (and deadlock detection) required
- Data items may be replicated to improve data availability
- Details of all above in Chapter 24

Cloud Based Services

- Cloud computing widely adopted today
  - On-demand provisioning and **elasticity**
    - ability to scale up at short notice and to release of unused resources for use by others
- Infrastructure as a service
  - Virtual machines/real machines
- Platform as a service
  - Storage, databases, application server
- Software as a service
  - Enterprise applications, emails, shared documents, etc,
- Potential drawbacks
  - Security
  - Network bandwidth

Cloud Service Models

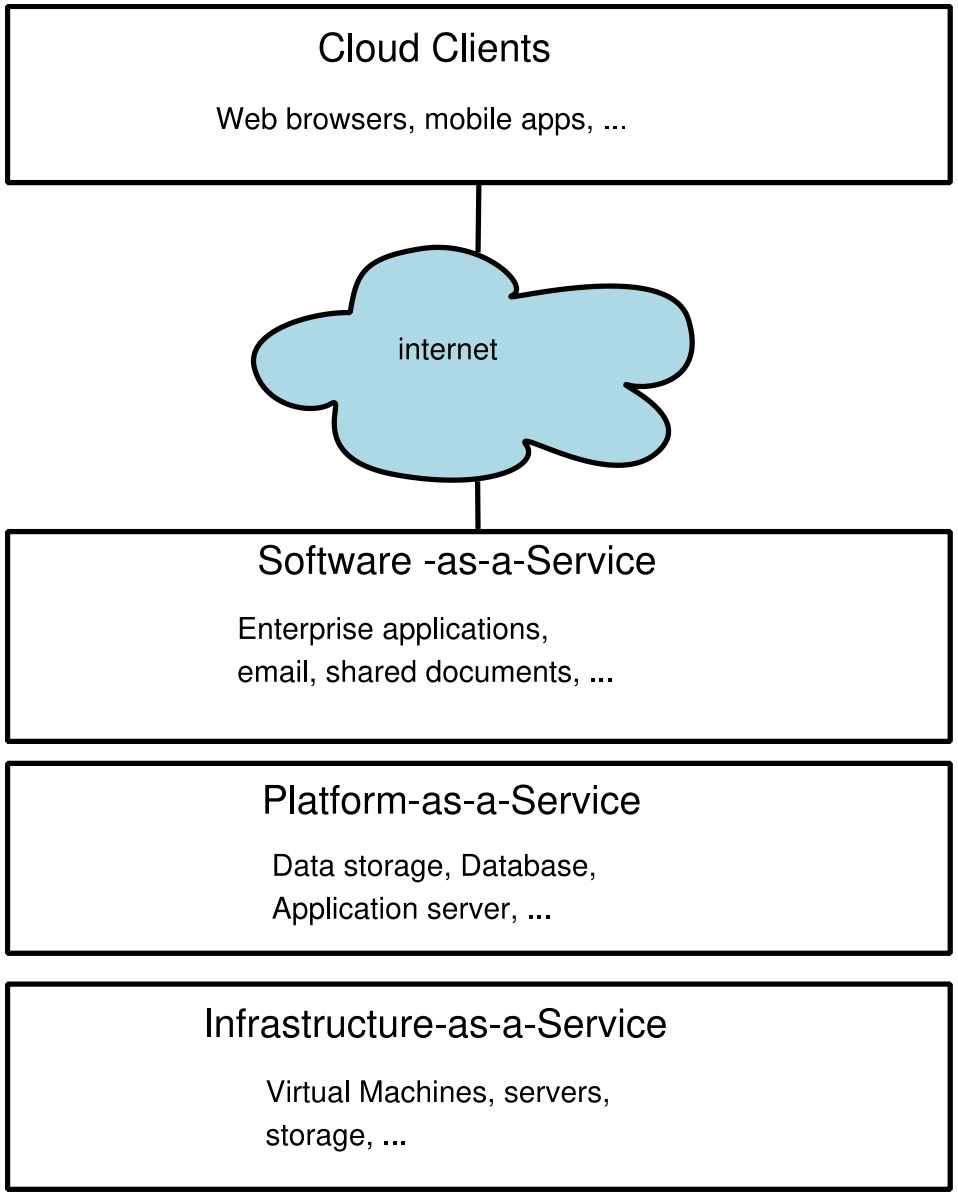

Application Deployment Alternatives

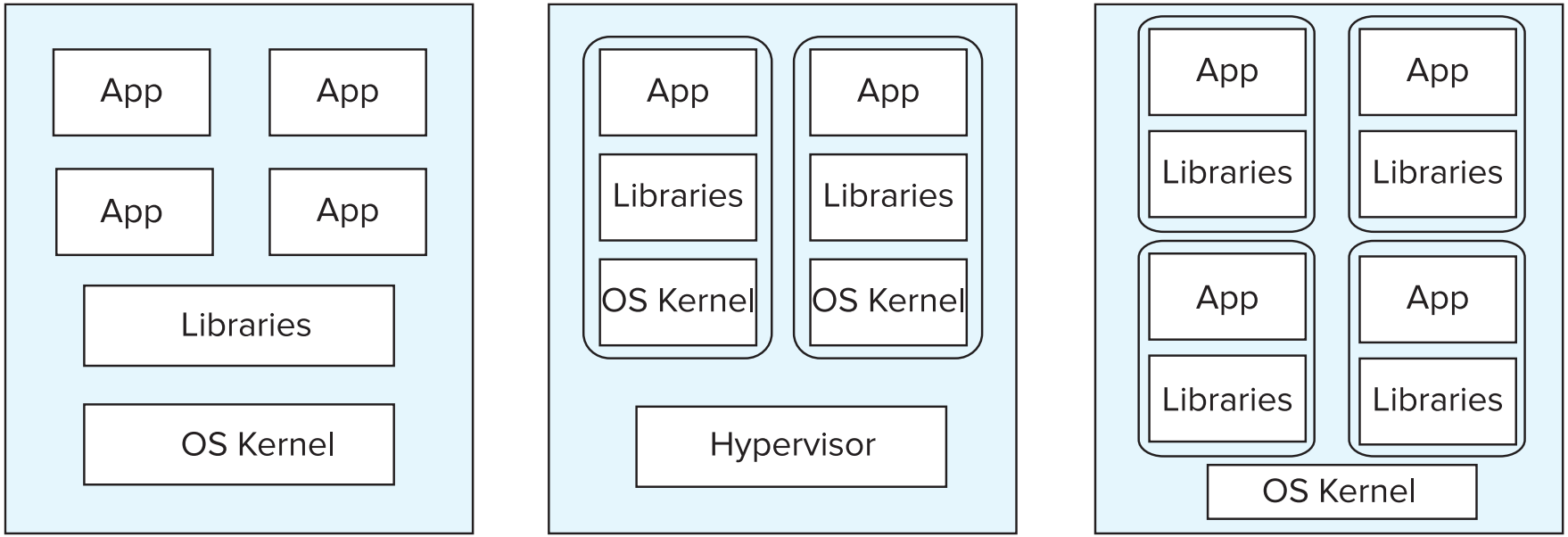

a) Multiple applications on a single machine

b) Each application running on its own VM, with multiple VMs running in a machine

c) Each application running in its own container, with multiple containers running in a machine

Individual Machines

Virtual Machines
(e.g. VMWare, KVM, ..)

Containers
(e.g. Docker)

Application Deployment Architectures

- Services
- Microservice Architecture
  - Application uses a variety of services
  - Service can add or remove instances as required
- Kubernetes supports containers, and microservices

End of Chapter 20

©Silberschatz, Korth and Sudarshan
See www.db-book.com for conditions on re-use

Figure 17.11

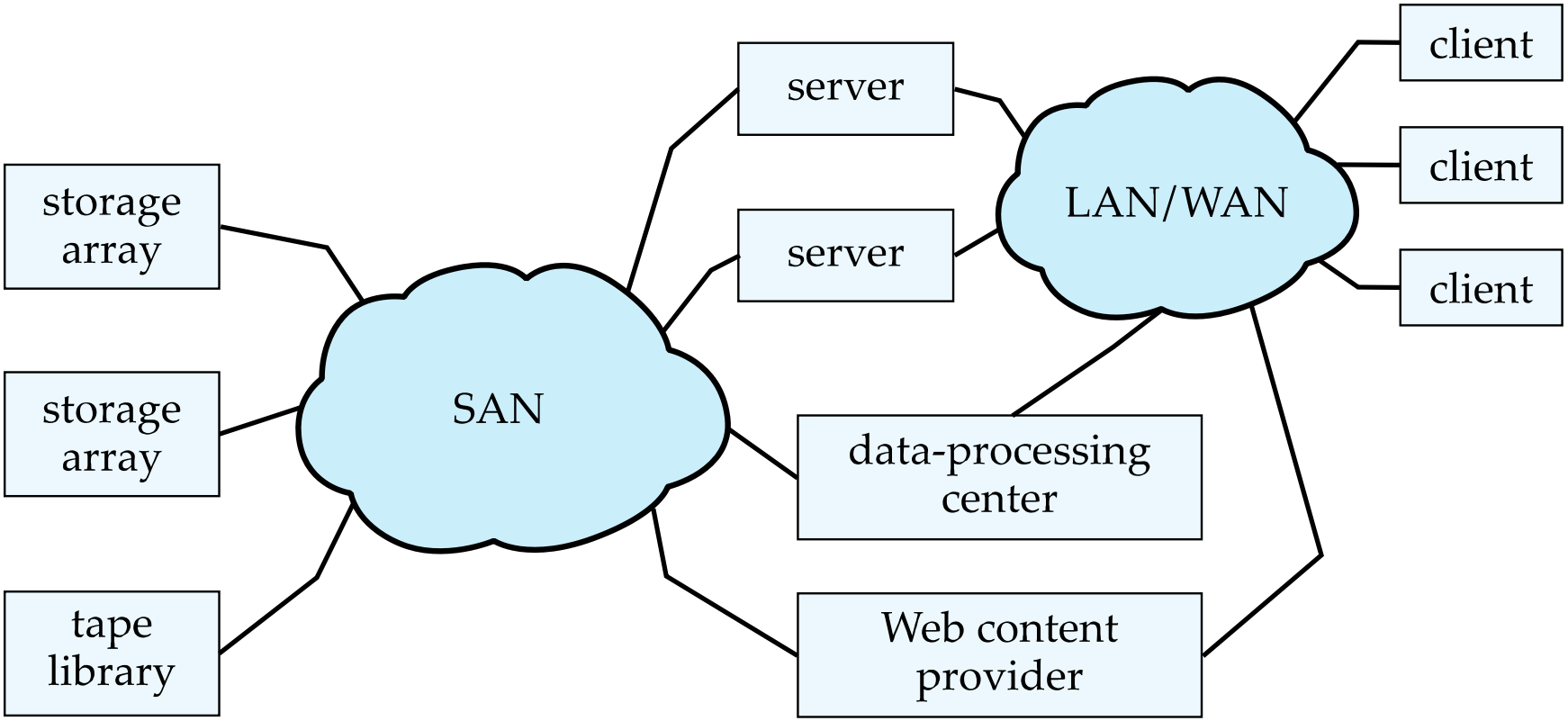
storage array
storage array
tape library
SAN
server
server
LAN/WAN
client
client
client
data-processing center
Web content provider